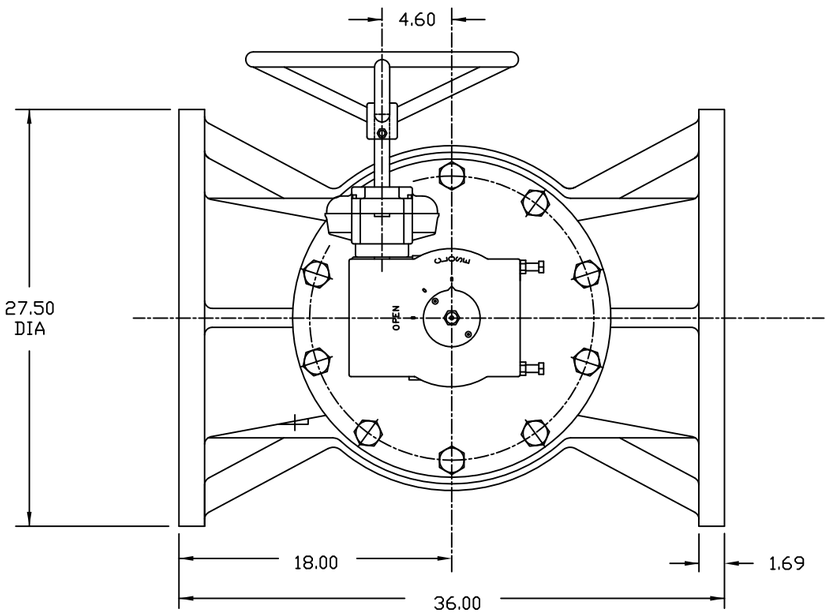

VALVE TYPE:

CLASS 125, CAST IRON LUBRICATED PLUG VALVE

GENERAL SPECIFICATIONS:

1. FLANGES CONFORM TO ANSI B16.1 "CAST IRON PIPE FLANGES AND FLANGE FITTINGS," CLASS 125.

NOTES:

1. VALVE SHOWN IN CLOSED POSITION
2. ROTATION TO OPEN POSITION IS COUNTER-CLOCKWISE.

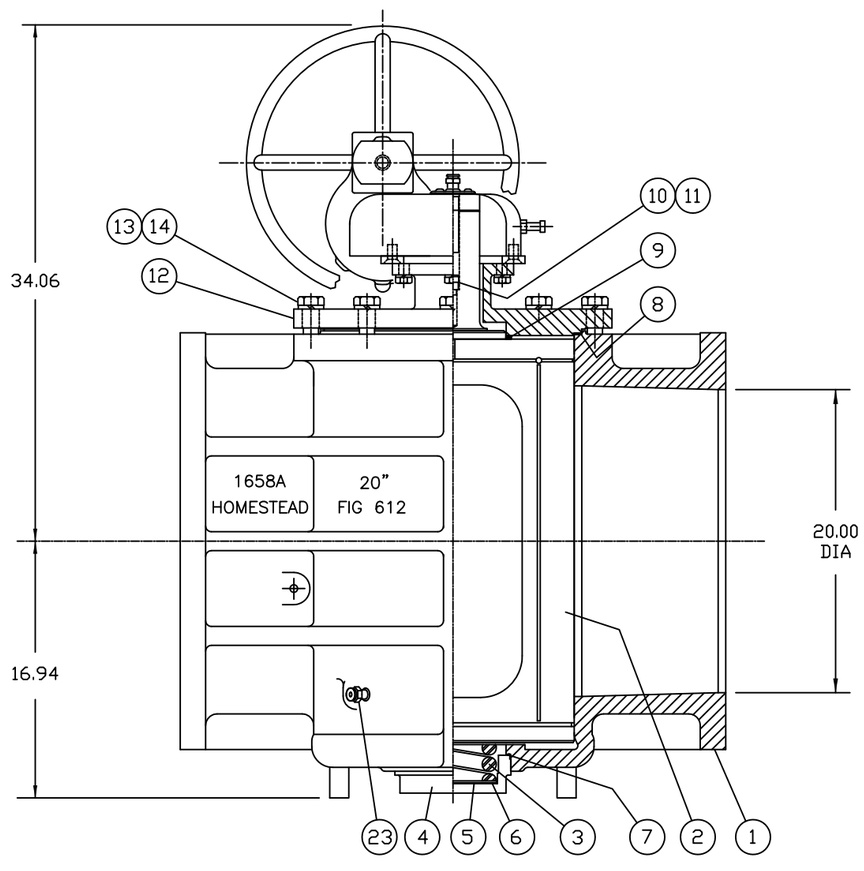

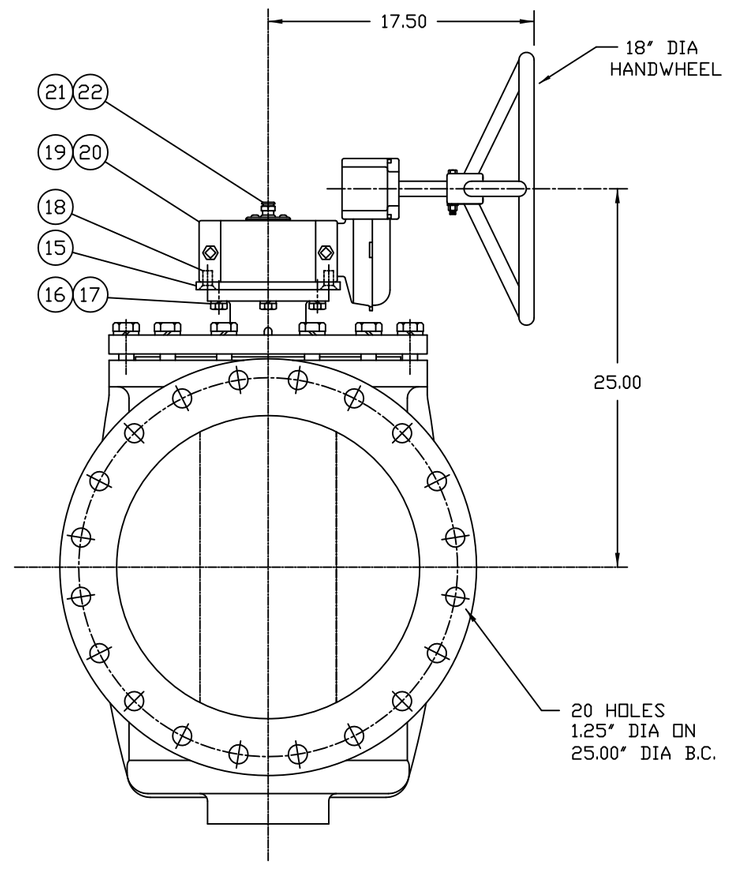

NO.	PART NAME	MATERIAL
23	LUBE FITTING	STEEL
22	SEALANT	AS REQUIRED
21	LUBE SCREW	STEEL
20	KEY	STEEL
19	GEAR W/ HANDWHEEL	COMMERCIAL
18	FLAT HD CAPSCREW	ZINC PLATED STEEL
17	LOCKWASHER	ZINC PLATED STEEL
16	HEX CAPSCREW	ZINC PLATED STEEL
15	ADAPTER PLATE	STEEL
14	LOCKWASHER	ZINC PLATED STEEL
13	HEX CAPSCREW	ZINC PLATED STEEL
12	ADAPT-O-CAP	A126 CL B
11	O RING	VITON
10	CHECK VALVE	STEEL
9	HEAD SEAL	PTFE
8	GASKET	FIBER/NITRILE RUBBER
7	GASKET	COPPER
6	DISC	STEEL
5	DISC	PTFE
4	BONNET	A126 CL B
3	SPRING	STEEL
2	PLUG	A126 CL B
1	BODY	A126 CL B

PARTS LIST

HOMESTEAD VALVES

A DIVISION OF OLSON TECHNOLOGIES, INC.

160 WALNUT ST. ALLENTOWN, PA. 18102 (610) 770-1100

REV	ISSUE	BY	APPR	DATE
A	S1507	RH	DM	3/10/14

TITLE: 20" FIG 612G ASSEMBLY

NUMBER: SK-2219