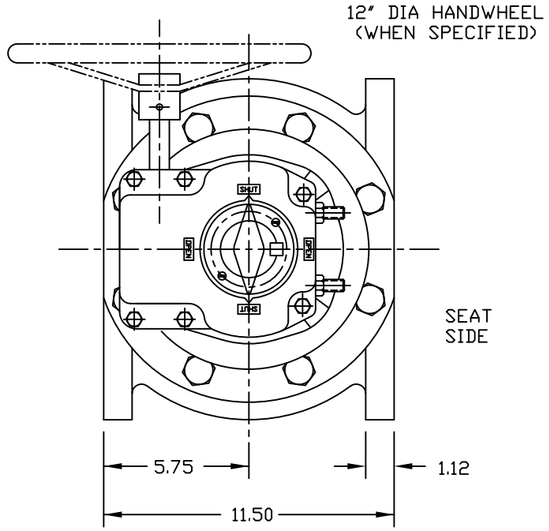

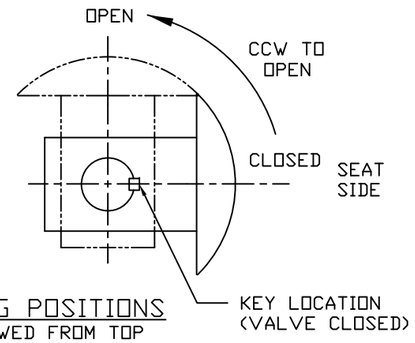

PLUG POSITIONS
VIEWED FROM TOP

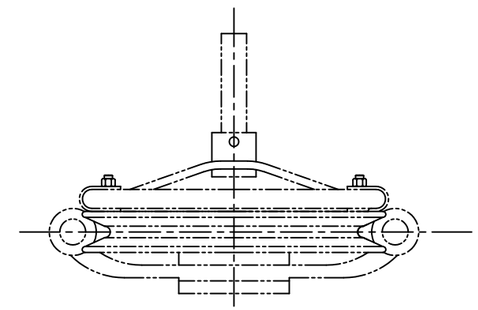

CHAINWHEEL
(WHEN SPECIFIED)
SHIPPED SEPARATELY

NOTES:

1. VALVES ARE MANUFACTURED IN ACCORDANCE WITH ANSI/AWWA C517-09, "RESILIENT-SEATED CAST IRON ECCENTRIC PLUG VALVES
2. END FLANGE DIMENSIONS AND DRILLING ARE IN ACCORDANCE WITH ASME/ANSI B16.1, CLASS 125, "CAST IRON PIPE FLANGES AND FLANGE FITTINGS."
3. PAINT: BLUE - SEMI-GLOSS METAL PRIMER
4. ELASTOMERS AVAILABLE: BUNA-N
   EPDM
   NEOPRENE
   VITON

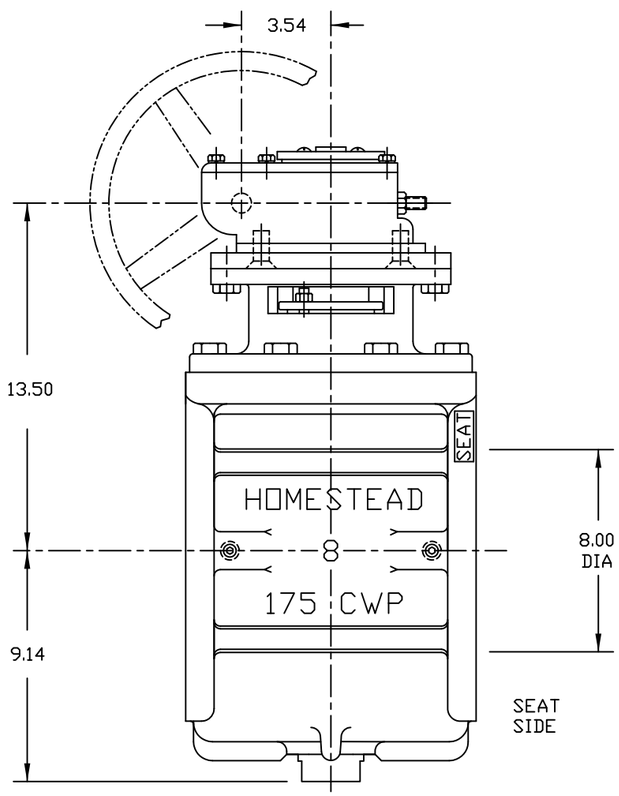

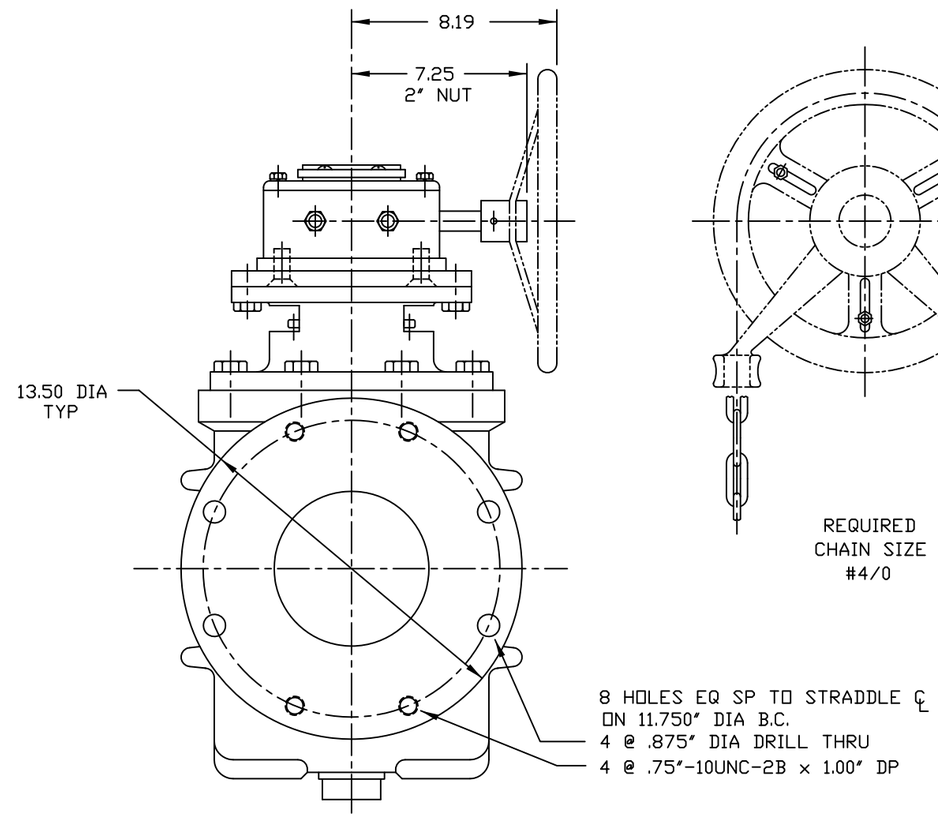

SEAT SIDE

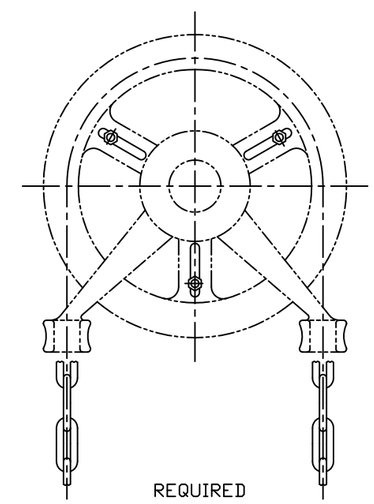

REQUIRED
CHAIN SIZE
#4/0

NO.	PART NAME	MATERIAL
19	CHAINWHEEL ASSY	WHEN SPECIFIED
18	KEY	STEEL
17	GEAR	COMMERCIAL
16	CAPSCREW	STEEL ZINC PLATED
15	PIPE PLUG	A126 CLB
14	SEAL	SEE NOTE 4
13	BONNET	A126 CLB
12	NUT	STEEL ZINC PLATED
11	STUD	STEEL, ALLOY
10	PACKING GLAND	A126 CLB
9	PACKING	V-RING, SEE NOTE 4
8	RADIAL BEARING	PERM. LUBRICATED 316SS
7	THRUST BEARING	PTFE
6	THRUST BEARING	PTFE
5	RADIAL BEARING	PERM. LUBRICATED 316SS
4	CAP SCREW	STEEL ZINC PLATED
3	ADAPT-O-CAP	A126 CLB
2	PLUG	A126 CLB/SEE NOTE 4
1	BODY	A126 CLB/NICKEL SEAT

PARTS LIST

HOMESTEAD VALVES
A DIVISION OF OLSON TECHNOLOGIES, INC.
160 WALNUT ST. ALLENTOWN, PA. 18102 (610) 770-1100

REV	ISSUE	BY	APPR	DATE
A	S1600	RH	DM	10/21/15

TITLE
8" ECCENTRIC PLUG VALVE
w/ GEAR

NUMBER
SK-4038

6X