VALVE SIZE	TABLE OF DIMENSIONS											
	A	B	C	D	E	F	G	H	I	J	K	L
16	20.00	14.38	23.50	1.875	8.00	1.437	1.125	12	21.25	1"-8	7.25	4.76
18	21.00	14.38	25.00	2.250	8.00	1.562	1.250	12	22.75	1-1/8"-7	7.25	4.76
20	23.50	15.38	27.50	2.250	8.00	1.687	1.250	16	25.00	1-1/8"-7	8.00	5.59
24	27.50	15.38	32.00	2.250	8.00	1.875	1.375	16	29.50	1-1/4"-7	8.00	5.59

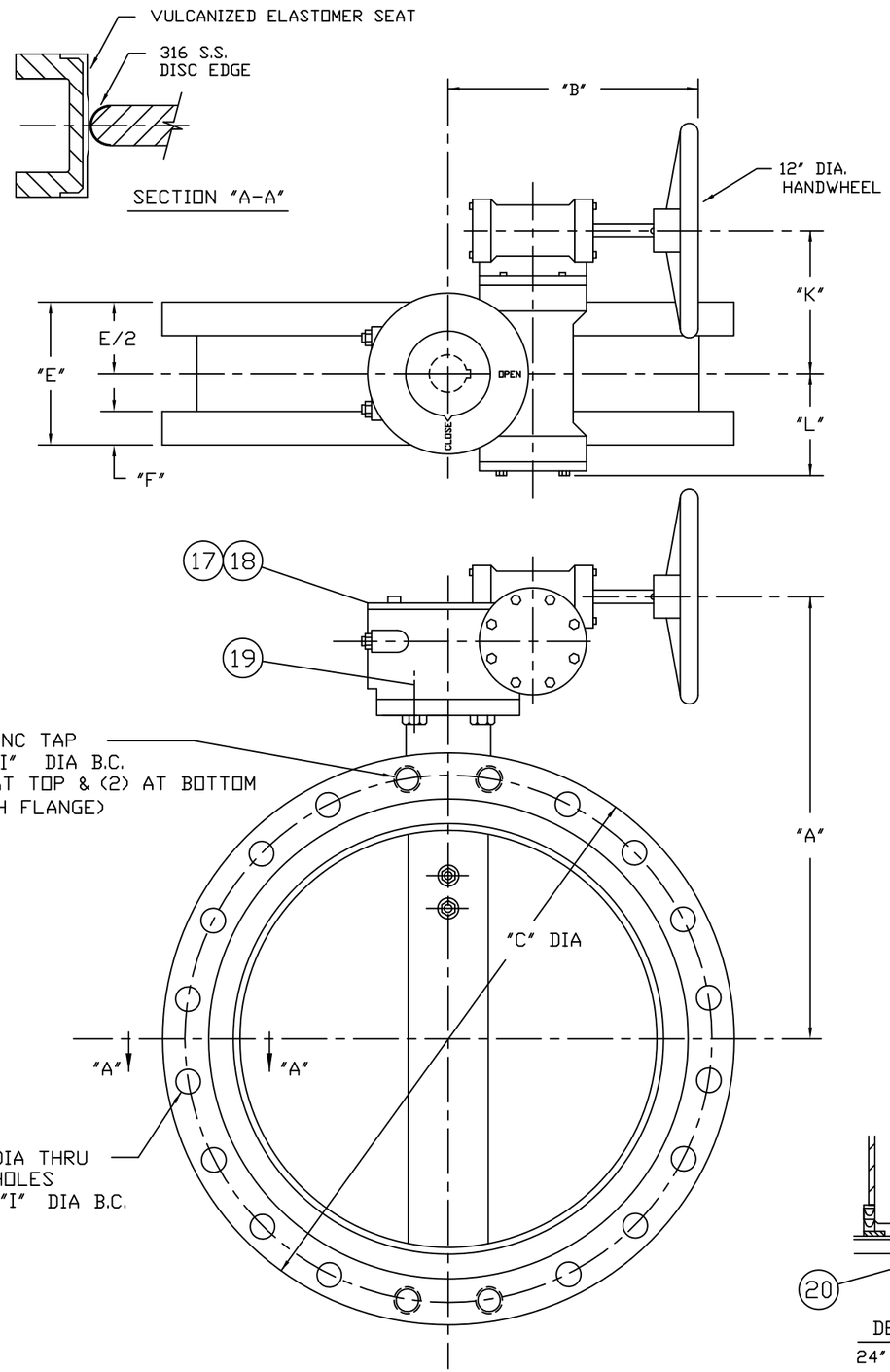

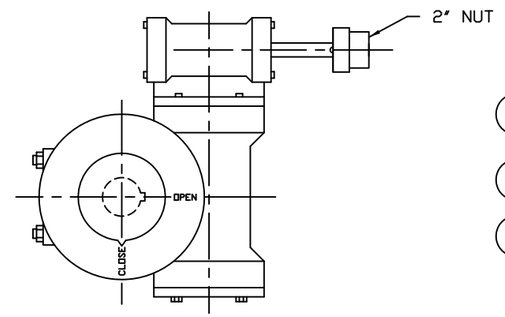

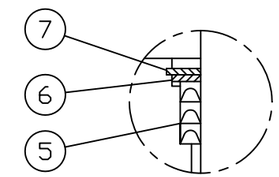

ENLARGED VIEW

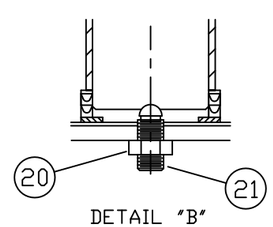

DETAIL "B"
24" SIZE ONLY

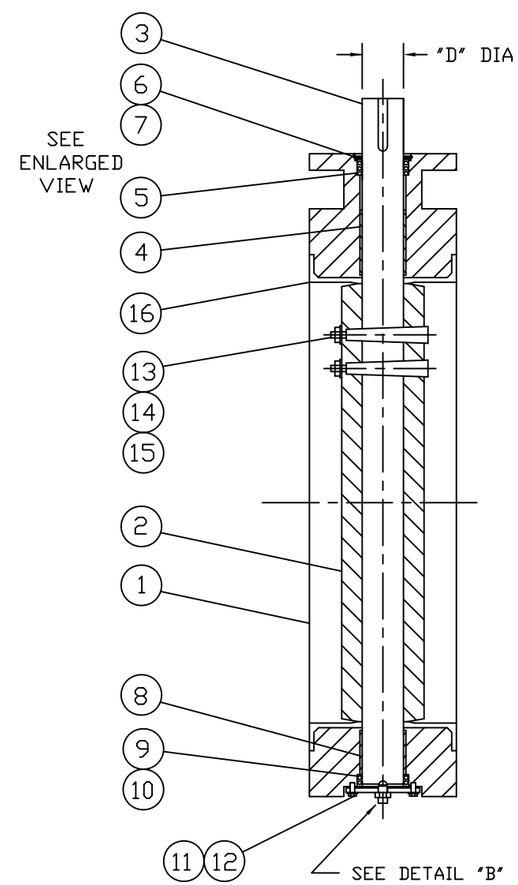

VALVE SIZE	NITRILE (BUNA-N) SEAT	
	HANDWHEEL PART NO.	2" NUT PART NO.
16	8202620160	8202650160
18	8202620180	8202650180
20	8202620200	8202650200
24	8202620240	8202650240
VALVE SIZE	EPDM SEAT	
	HANDWHEEL PART NO.	2" NUT PART NO.
16	8209720160	8209750160
18	8209720180	8209750180
20	8209720200	8209750200
24	8209720240	8209750240

HOMESTEAD SERIES 820 AWWA BUTTERFLY VALVE

GENERAL SPECIFICATIONS:

1. MANUFACTURED IN ACCORDANCE WITH AWWA C504, CLASS 150B, LATEST REVISION.
2. FLANGES CONFORM TO ANSI B16.1 CAST IRON PIPE FLANGES AND FLANGE FITTINGS", CLASS 125.
3. BODY AND DISC TO BE COATED WITH: "NSF 61 APPROVED" FUSION-BONDED EPOXY
4. DIRECTION TO OPEN VALVE IS COUNTER-CLOCKWISE
5. ELASTOMERS AVAILABLE: EPDM AND NITRILE (BUNA N)

NO.	PART NAME	MATERIAL
21	THRUST BOLT	STEEL ZINC PLATED
20	HEX NUT	STEEL ZINC PLATED
19	CAPSCREW	STEEL ZINC PLATED
18	GEAR	COMMERCIAL
17	KEY	STEEL
16	SEAT	SEE NOTE 5
15	HEX NUT	304 STAINLESS STEEL
14	WASHER	304 STAINLESS STEEL
13	PIN	304 STAINLESS STEEL
12	CAP SCREW	STEEL ZINC PLATED
11	BOTTOM COVER	CARBON STEEL
10	WASHER	304 STAINLESS STEEL
9	PACKING	V-RING/SEE NOTE 5
8	LOWER BEARING	NYLON
7	RETAINING SPRING	CARBON STEEL
6	WASHER	304 STAINLESS STEEL
5	PACKING	V-RING/SEE NOTE 5
4	UPPER BEARING	NYLON
3	SHAFT	316 STAINLESS STEEL
2	DISC/EDGE	A536 65-45-12/316 SS
1	BODY	A536 65-45-12

PARTS LIST

HOMESTEAD® VALVES
A DIVISION OF OLSON TECHNOLOGIES, INC.
160 WALNUT ST. ALLENTOWN, PA. 18102 (610) 770-1100

REV	ISSUE	BY	APPR	DATE
C	S1607	RH	DM	9/7/14
B	S1316	RH	DED	3/21/11
A	S762	RH	DED	3/10/06

TITLE: 16"-24" SERIES 820 - GEAR AWWA BUTTERFLY VALVES

NUMBER: SK-5003

4X